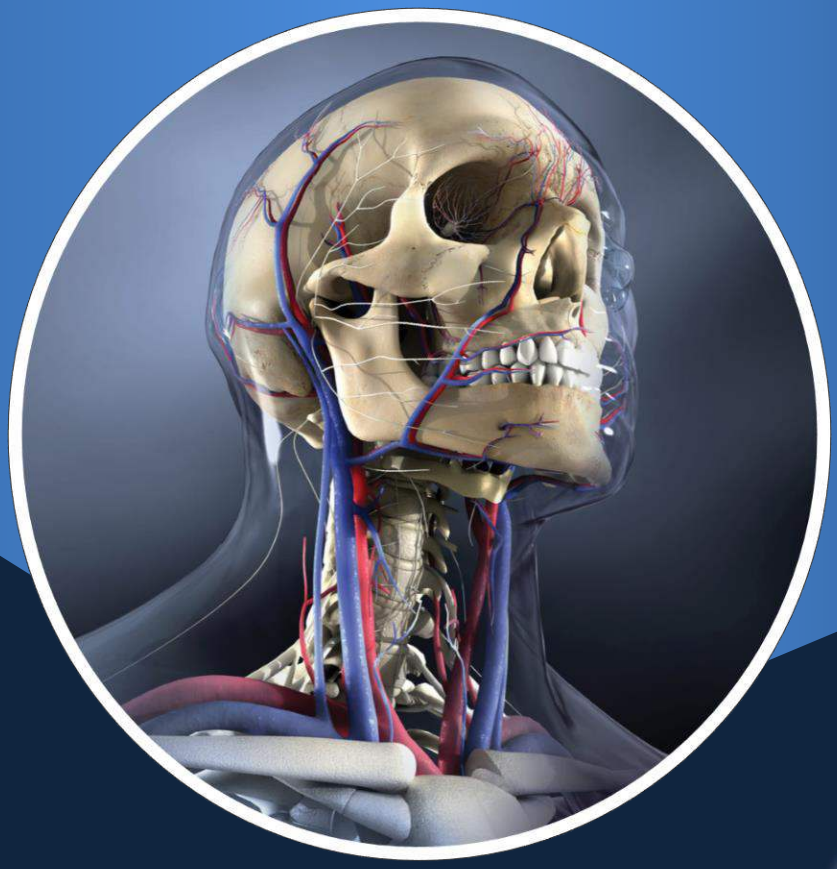

Oral Surgery

Third Stage

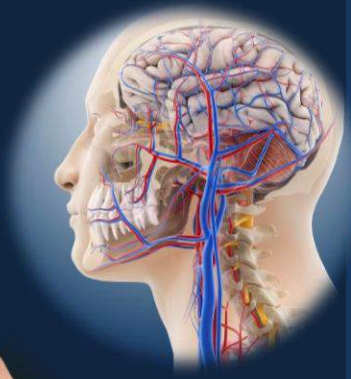





Zaid A. Abdullah

B.D.S., MSc

Zaid A. Abdullah
B.D.S., MSc

Lecture 2

Pharmacology of Local Anesthesia

Constituents of local anesthetic solution (Local anesthetic cartridge):

1. **local anesthetic agent** (esters or amides type)
2. **Vasoconstrictor agent**. (will be discussed later)
3. **Reducing agent:** vasoconstrictors in local anesthetic solution are unstable and may oxidize, especially on prolonged exposure to sunlight. This will lead to brown discoloration of the solution and this is an indication that the solution should be discarded. In an attempt to overcome this problem a small quantity of **sodium bisulphite**, which compete for the available oxygen, is included in the solution. Since this substance is more readily oxidized than adrenaline or nor adrenaline it protects their stability.
4. **Preservative**: the sterility of local anesthetic solution is maintained by the inclusion of a small amount of preservative. Some preservatives such as **methyl paraben** have been shown to produce allergic reaction in sensitized subjects.
5. **Fungicide**: in the past some solutions tended to become cloudy due to the proliferation of minute fungi, now a small quantity of **thymole** is added to serve as a fungicide and prevent this occurrence.
6. **Vehicle**: the anesthetic agent and the additives mentioned above are dissolved in **modified ringer's solution**. This isotonic vehicle minimizes discomfort during injection.
7. **Distilled Water** it is used as diluting to provide the volume of solution in the dental cartridge

"Local anesthetic agents"

Local anesthetics are drugs which upon topical application or local injection cause a reversible loss of sensory perception, especially of pain in a restricted

area of the body, it provides pain control during dental therapy and it interrupts the propagation of impulse preventing it from reaching the brain.

These drugs are listed by their percentage (%) concentration. The number of mg of an agent contained in the cartridge can be calculated by multiplying the percentage (%) concentration by the number of ml in the cartridge. Thus, a cartridge containing 1.8 ml of 2% local anesthetic solution contains 36 mg of the local anesthetic agent (2% mean that for each ml there is 20 mg, if the cartilage contains 1.8 ml then 1.8x2=36 mg of the local anesthetic agent in a single cartilage).

Classification of local anesthetics

The local anesthetic agents can be classified in various ways

1 – on the basis of occurrence in nature

- Natural (e.g. cocaine)
- Synthetic (e.g. lignocaine)

2 – on the basis of duration of action

- Short-acting (e.g. articaine, lidocaine)
- Long-acting (e.g. bupivacaine)

3 – on the basis of chemical structure

- Ester (e.g. **Procaine**, Cocaine, **Benzocaine**)
- Amide (e.g. **Lidocaine**, Prilocaine, **Articaine**)

Local anesthetics are classified as either esters or amides according to their chemical linkages the chemical structure is shown below:

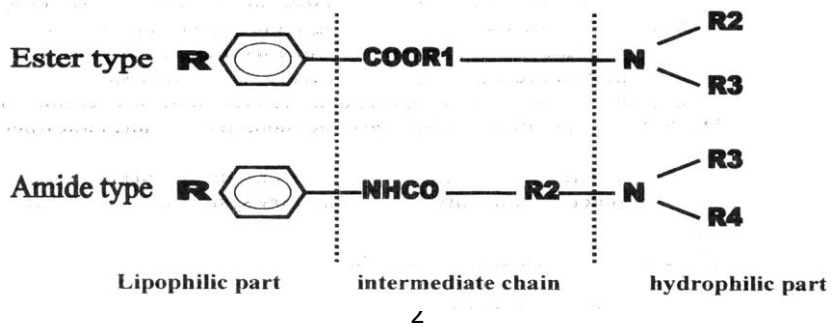

The **lipophilic** part is the largest portion of the molecule, which is aromatic in structure, while the **hydrophilic** part is an amino derivative of ethyl alcohol or acetic acid. The chemical structure is completed by an intermediate hydrocarbon chain containing either an ester or an amide linkage. **All local** anesthetics are **amphipathic** that is they **possess both lipophilic and hydrophilic** characteristics generally at opposite ends of the molecule.

Notes: -

1. local anesthetics without a **hydrophilic part** are **not suited for injection** but are good topical anesthetics (ex: benzocaine)
2. Ester linked local anesthetic (ex: procaine) are readily hydrolyzed in aqueous solution, while amide linked types (ex: lidocaine) are relatively resistant to hydrolysis.
3. A greater percentage of an amide linked drug is excreted unchanged in the urine than of an ester linked drug.

Pharmacokinetic of local anesthetics: -

Distribution: -

Once absorbed into the blood local anesthetics are distributed throughout the body to all tissues. The blood level of local anesthetic is influenced by the following factors: -

1. Rate at which the drug is absorbed into the cardiovascular system.
2. Rate of distribution of the drug from the vascular compartment to the tissue (more rapid in healthy patients than in those who are medically compromised e.g.;). congestive heart failure patients
3. Elimination of the drug through the metabolic or excretory pathways.

The last two factors act to decrease the blood level of local anesthetic.

Note: -

All local anesthetics readily cross the blood brain barrier, they also readily cross the placenta and enter the circulatory system of the developing fetus.

Metabolism (biotransformation): -

A. Ester local anesthetics: -

Ester local anesthetics are hydrolyzed in the **plasma** by the enzyme **pseudo cholinesterase**. Procaine undergoes hydrolysis to para amino benzoic acid which is excreted unchanged in the urine. Allergic reactions that occur in response to ester drugs are usually not related to the parent compound (e.g.; procaine) but rather to para amino benzoic acid which is a major metabolic product of ester local anesthetic. Peoples having atypical form of pseudo cholinesterase get inability to hydrolyze ester local anesthetics and other chemically related drugs thus get prolongation of higher blood levels of the local anesthetic and an increased potential for toxicity.

B. amide local anesthetics: -

The metabolism of the amide local anesthetics is more complex than that of the esters the primary site of biotransformation of amide drugs is the **liver.** The metabolic products of certain local anesthetics are capable of producing significant clinical activity if permitted to accumulate in the blood (due to renal or cardiac failure and during periods of prolonged drug administration). A clinical example is the production of methemoglobinemia in patients receiving large doses of prilocaine or articaine these drugs cannot produce methemoglobinemia but their metabolic products induce the formation of methemoglobin which is responsible for methemoglobinmia another example is the sedative effect occasionally observed following lidocaine administration. Lidocaine does not produce sedation but some of its metabolic products are currently thought to be responsible for this clinical action.

Excretion:

The **kidneys** are the primary organ for both the local anesthetics and its metabolites. A percentage of a given dose of local anesthetic drug will be excreted unchanged in the urine and this varies according to the drug. Esters appear in only very small concentration as a parent in the urine; this is because

they are hydrolyzed almost completely in the plasma. Amides are usually present in the urine as the parent compound in a greater percentage than are esters, because of their more complex process of biotransformation.

Patients with significant renal impairment may be unable to eliminate the local anesthetic compound or its metabolites from the blood, resulting in slightly elevated blood levels and an increase potential for toxicity. This may occur with either the esters or the amides drugs. Thus patients with a significant renal disease may represent a relative contraindication to the administration of local anesthetics.

Common local anesthetic agents

Lignocaine (Lidocaine, Xylocaine)

Lignocaine: is the most commonly used local anesthetic agent in dentistry, it is the first non-ester type of local anesthetic agent to be used in dentistry, it is stable as it can be stored for a long time at room temperature, it withstands boiling and autoclaving and it is compatible with all types of vasoconstrictors.

- Classification: Amide.
- Metabolism: in the liver.
- Excretion: Via the kidneys. Less than 10% unchanged.
- Vasodilation Properties: Considerably less than those of procaine; however, greater than those of mepivacaine.
- The onset of Action: Rapid (3 to 5 minutes).
- Effective Dental Concentration: 2%.
- Anesthetic Half-Life: (90 minutes).
- Topical Anesthetic Action: Yes (with a concentration of 5% or 10%).
- Availability in dentistry: dental cartridge of 2% lidocaine with or without epinephrine

Maximum Recommended Dose:

The maximum recommended dose of lidocaine with epinephrine (1:100.000) is **7 mg/kg.** While **4.5 mg/kg** is the maximum dose of lidocaine without epinephrine. In all the cases not to exceed an absolute maximum **dose of 500mg**.

Lidocaine replaced procaine (Novocain) as the drug of choice for pain control. Compared with procaine, lidocaine possesses a significantly more rapid onset of action, produces more profound anesthesia, has a longer duration of action and has greater potency.

Allergy to amide local anesthetics is extremely rare; although possible, this is a major clinical advantage of lidocaine and all amides over ester-type local anesthetics.

Selection of local anesthetic agent is based on:

1. Duration of action
2. Need for control of post-operative pain
3. Physical and mental status of the patient
4. Concomitant medications

An approximate duration for completing the surgical procedure should be taken into account. Based on duration, the action of the local anesthetic agent can be grouped as:

1. Ultrashort-acting agents: where the duration of action is less than 30 minutes: e.g. 2 % lidocaine without vasoconstrictor.
2. Short-acting agents: where the duration of action is 30 to 90 minutes: e.g. 2% lidocaine with vasoconstrictor.

3. Medium-acting agents: where the duration of action is 90 to 180 minutes: e.g. 4 % prilocaine with vasoconstrictor.

4. Long-acting agents: where the duration of action is 180 minutes or longer: e.g. 0.5% of bupivacaine.

Most of the oral surgical procedures result in varying amount of post-operative pain. The local anesthetic agent serves as additional medication that sometimes eliminates the need for postoperative analgesia.

Any co-existing medical condition such as hypertension, diabetes should be considered, a patient with a history of allergy to a specific local anesthetic agent should be considered. The mental status of the patient has to be evaluated, small children and the mentally retarded patient may traumatize their lip, tongue or cheeks due to the effect of local anesthesia.

S	The ester type	The amide type
1	Procaine	Lidocaine
2	Chloroprocaine	Prilocaine
3	Propoxycaine	**Articaine**
4	Butacaine	Bupivacaine
5	Cocaine	Dibucaine
6	Benzocaine	Etidocaine
7	Hexylcaine	Mepivacaine
8	Piperocaine	
9	Tetracaine	

Note: articaine contains both ester and amide linkages in its chemical structure, but is considered as an amide local anesthetic agent.

Vasoconstrictor

Are drugs that constrict blood vessels thereby control tissue perfusion. They are added to the local anesthetic solutions to oppose the vasodilatation actions of the local anesthetic agent.

After injection of the local anesthetic, blood vessels dilate in the area, resulting in an increased blood flow to the site. This increase in perfusion leads to the following reactions:

1. Increased rate of absorption of the local anesthetic into the cardiovascular system, which in turn removes it from the injection site.
2. Increased plasma level of the local anesthetic, with an increased risk of local anesthetic toxicity.
3. Decreased duration of action and decreased depth of anesthesia because it diffuses away from the injection site more rapidly.
4. Increased bleeding at the site of injection due to increased perfusion.

The advantages of additions of vasoconstrictors to the local anesthetic solution are:

1. Vasoconstrictors decrease blood flow (perfusion) to the site of the injection.
2. The absorption rate of the local anesthetics into the cardiovascular system is reduced, resulting in lower anesthetic plasma levels.
3. Decrease the risk of systemic toxicity (lower the local anesthetic plasma levels).
4. Increase the duration of action of local anesthetics (higher volumes of the local anesthetic agent remain in and around the nerve for longer periods).
5. Decrease bleeding at the site of injection, especially useful when increase bleeding is anticipated (e.g. during a surgical procedure).

Dilution of vasoconstrictors:

The dilution of the vasoconstrictor is commonly referred to as ratio (1 to 1000, and is written as 1:1000). This 1:1000 mean that there is 1 gm (1000 mg) of the drug contained in 1000 ml of solution.

Types of the vasoconstrictors:

1- Epinephrine (adrenaline):-

Sources: it is either synthetic or obtained from adrenal medulla of animals.

Mode of action: -

It acts directly on both alpha α & beta β receptors

Systemic action:

a- ***Cardiovascular system***

It causes increased systolic & diastolic B.P.

It causes increased heart rate & strength of contraction.

It causes increased stroke volume &cardiac output.

It causes increased myocardial O2 consumption.

On blood vessel it causes vasoconstriction & so frequently used a lone as a vasoconstrictor for hemostasis during surgical procedures.

B-Respiratory system: -

Epinephrine is a potent dilator of the smooth muscle of the bronchiole; it is the drug of choice for management of acute asthma.

c- Central nervous system (CNS)

In the usual therapeutic dosage epinephrine is not a potent CNS stimulant. CNS stimulation occurs when an excessive dosage is given.

Availability in dentistry

Epinephrine is the most potent & widely used vasoconstrictor in dentistry. It is available in 1:50 000, 1:80 000, 1:100 000, 1:200 000 dilutions.

Maximum dosage:

a- ***for pain control***

The least concentrated solution that produces effective pain control should be used.

***For normal healthy patient*:**

The max dose is **0.2 mg** per appointment &this means:

10 ml of a 1:50 000 dilutions (5 cartridge).

20 ml of a 1:100 000 dilutions (11 cartridge).

40 ml of a 1:200 000 dilutions (22 cartridge).

For patient with clinically significant cardiovascular dis.

The max dose **0.04 mg** per appointment, that means:

2 ml of a 1:50 000 (I cartridge).

4 ml of a 1:100 000 (2 cartridge).

8 ml of a 1:200 000 (4 cartridge).

b- For hemostasis:-

Epinephrine containing LA solution is used via infiltration in to the site of operation to prevent or minimize bleeding during surgical procedures.

For normal healthy patient the 1:50 000 dilution of epinephrine is more effective in hemostasis than less concentrated 1:100 000, or 1:200 000.

For patient with cardiovascular dis. The dilution of 1:100 000 is considered the best.

2- Nor epinephrine (noradrenalin)

Sources: either synthetic or obtained from adrenal medulla of animals.

Mode of action:

The mode of action is almost exclusively on alpha receptors. It also stimulates beta (β) receptors in the heart. Nor epinephrine is one fourth as potent as epinephrine.

Systemic action:

a - Cardiovascular system (C.V.S)

It causes increased systolic B.P.

It causes decreased heart rate.

It causes no changes or slightly decrease cardiac output.

It causes increased stroke volume.

It causes increased peripheral resistance on the blood vessel through alpha receptor stimulation, it produces constriction of cutaneous blood vessels & this will lead to increased peripheral resistance.

b- Respiratory system

Nor epinephrine does not relax smooth muscle as do epinephrine & it is not clinically effective in the management of bronchospasm.

c-- CN*S*

In the usual therapeutic dosage nor epinephrine is not potent CNS stimulant CNS stimulating action predominate when an excessive dosage is given.

Availability in dentistry:

Sometimes, nor epinephrine is used with LA as vasoconstrictor in a l: 30000 dilutions.

Max. doses:

Nor epinephrine should be used for pain control only but not for hemostasis. For normal healthy patient:

0.34 mg per appointment, that mean 10 ml of a 1:30 000

For patient with clinically significant cardiovascular dis.

0.14 mg per appointment, that means 4ml of a 1:30000.

Levonordefrin (Neo-cobefrin):

It is synthetic substance.

It acts through direct alpha receptor stimulation with some *B* beta activity. It produces less cardiac &CNS stimulation than epinephrine does. It is mainly used with mepivacaine in a 1:20 000 dilutions. The max. dose for all patients should be 1 mg per appointment that mean 20 ml of a 1:20 000 dilutions (11 cartridge).

Felypressin (octapressin):

Sources: it is the analogue of the ant diuretic hormone vasopressin .it is a non-sympathomimetic drug & is categorized as vasoconstrictor.

Mode of action:

It acts as direct stimulant of vascular smooth muscle. Its action appears to be more pronounced on the venous than the arteriolar microcirculation.

Systemic action:

Heart: no direct effects

Blood vessel: In high doses. Felypressin -induced constriction of cutaneous blood vessel &may produce facial pallor.

CNS: no effect

Uterus: it has both antidiuretic & oxytocic actions, the latter contraindicating its uses in pregnant patient.

Clinical application:

It is used as vasoconstrictor to decrease the absorption as well as to increase the duration of the anesthesia .it is not recommended for use when hemostasis is required because of their predominant effect on the venous rather than the arterial circulation. Availability in dentistry:

It is used in a dilution of 0.03 iu/ml with3% prilocaine (it means international unit). Max. doses is 0.27 IU, that means: 9ml of 0.03 iu/ml.

Selection of a vasoconstrictor

The selection of an appropriate vasoconstrictor is based on following factors:

1. Length of the surgical procedure: The duration of plain anesthesia only lasts for few minutes; the addition of adrenaline will prolong the duration.

2. The requirement of hemostasis: Some of the vasoconstrictors are effective in minimizing the blood loss during the surgical procedure as adrenaline, while Felypressin is of minimal value in achieving hemostasis.

3. The requirement of postoperative pain control: Adding vasoconstrictor will prolong the pain-free status.

4. Physical status of the patient and medication used: The benefit and risks of including a vasoconstrictor in a local anesthetic solution in patients who are medically compromised must be weighed against benefits and risks of using plain anesthesia.

For the following group of patients, the use of local anesthetic agents with vasoconstrictor is contraindicated:

A. Patients with a significant cardiovascular disease such as ischemic heart disease, hypertension or cerebral strokes.

B. Patients with thyrotoxicosis.

C. Patients receiving monoamine-oxidase inhibitors or tricyclic antidepressant.

Calculation of the dose of local anesthetics in dentistry (Using lidocaine as an example)

As any other drug, LA has a max safe dose. The dose is calculated in mg per kg of body weight (mg/kg body weight) .

The amount of LA agent (e.g. lidocaine) that is present in the cartridge is written on the cartridge by it's percent conc.

The number of milligram of the agent in the cartridge therefore can be calculated by.

multiplying the percent cone, (ex 2% - 2gm/100ml=2000 mg/100 ml=20 mg/ml) by 1.8 or 2.2 (number of milliliters in the cartridge).

Thus 1.8 ml cartridge of 2% lidocaine contains 36 mg lidocaine.

Example:-

The maximum safe dose of lidocaine is 4.5 mg/kg body weight per appointment .this means that maximum dose of 2% lidocaine (without epinephrine)that could be given to a 70 kg patient about 300 mg per appointment (4.5*70=315 mg).

To calculate the max number of cartridge:

2% means 2 gm. /100 ml - 2000 mg/100 ml

20 mg /ml * 1.8 = 36 mg lidocaine inside the single cartridge.

300 mg / 36 mg =8 cartridges.

This calculation is considering that the local anesthesia is plain (i.e. without a vasoconstrictor).

We should remember that the max. dose of the vasoconstrictor is 0.2 mg per appointment for adult healthy patient. And 0.04 mg per appointment for patient with clinically significant cardiovascular dis, & should be considered when calculating the max number of cartridge that are allowed to be given to the patient per appointment & according to the type & concentration of the vasoconstrictor.