Radiation physics-theoretical
Lec.5:focal spot

Asst.Lec.Dumoaa Haider Shakir

Focal spot

- **Focal Spot is the area of target from which x-rays are emitted.**
  The smaller the focal spot, the better the spatial resolution of the image.

  As the size of focal spot decreases, heating of target is concentrated onto A smaller area (limiting factor to focal spot size). This problem is solved by the line focus the principle

- **The line focus principle** is a technique used in imaging refers to the slanted target surface of the anode, which creates a longer focal spot in one dimension. This principle allows for a smaller effective focal spot size from large actual focus spot resulting in better spatial resolution and sharper X-ray images .

- **The Effective Focal Spot** is the beam projected onto the patient and the film.

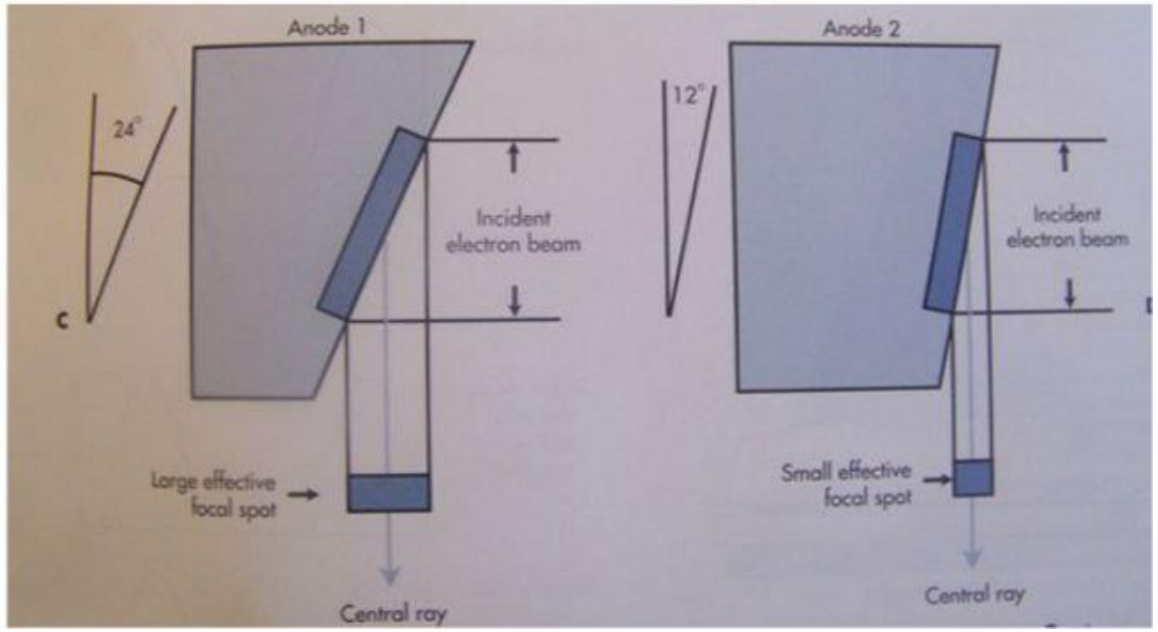

- As the **target angle decreases**, **the effective focal spot decreases**.

- Diagnostic tube target angles range from **5 º to15 º**.

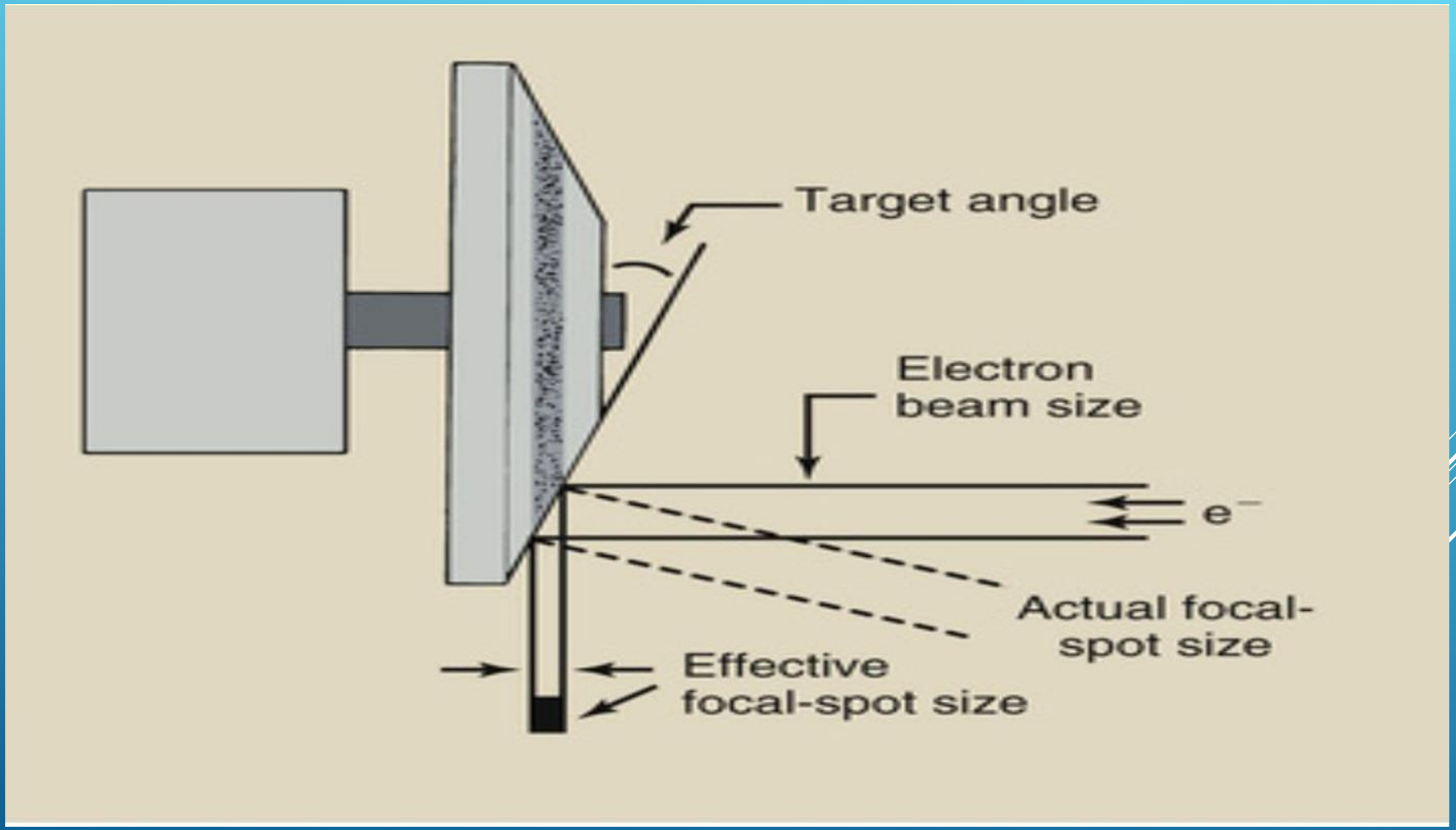
Target angle
Electron
beam size
e⁻
Actual focal-
spot size
Effective
focal-spot size

Advantage of The Line Focus Principles

1. Improved spatial resolution: The line focus principle allows for better spatial resolution by using a smaller effective focal spot size. This results in sharper and more detailed images, especially in areas with complex anatomy or small structures.

2. Reduced heat loading: By angling the anode target, the line focus principle distributes the heat generated during X-ray production over a larger area. This helps to dissipate heat more effectively, reducing the risk of overheating and prolonging the lifespan of the X-ray tube.

3. Enhanced image quality: The smaller effective focal spot size achieved with the line focus principle helps to reduce image blurring caused by geometric un sharpness. This leads to improved image quality and diagnostic accuracy.

Limitation of The Line Focus Principles

1. Area covered by the beam reduces with target angle.

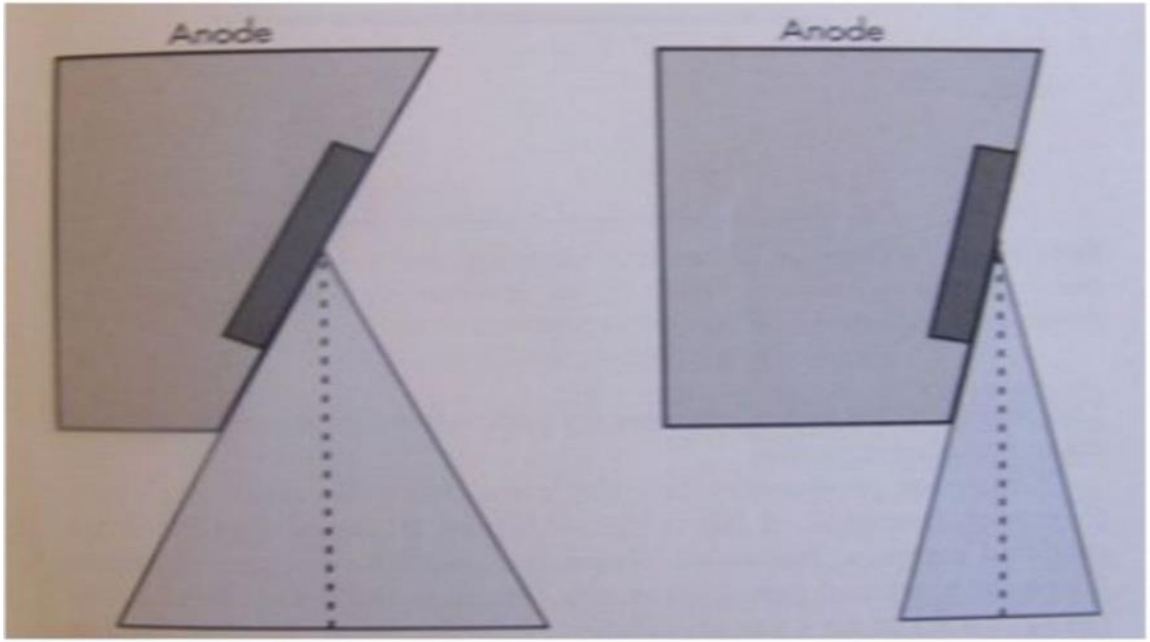

1. Anode heel effect (next slide)

The Anode Heel Effect

The anode heel effect Due to the absorption of by the anode heel x-rays the radiation intensity on the cathode side of the x ray tube is higher than the anode side, as shown in figure below.

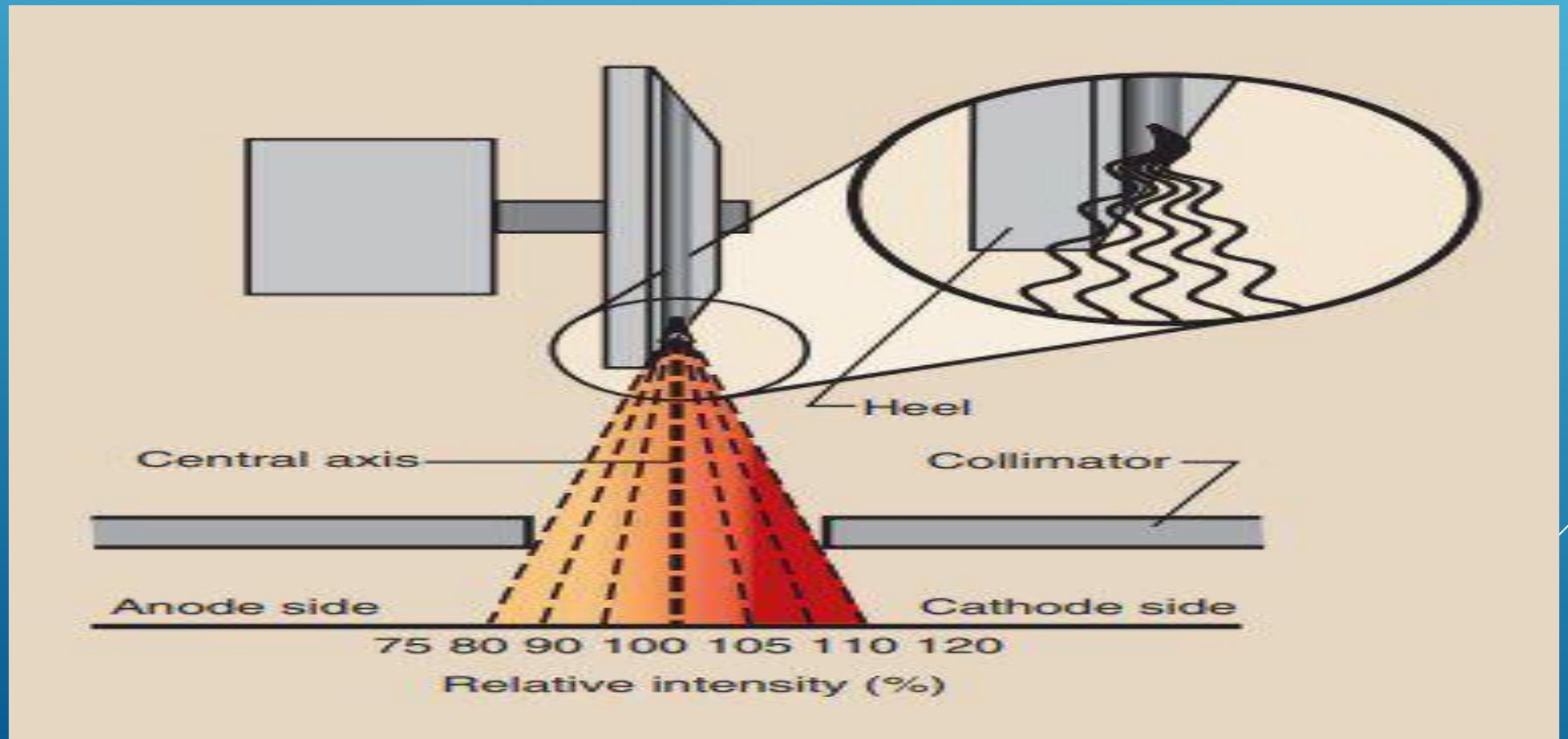

- **This effect is increased when the target angle is reduced.**

- **The solution to treat the Anode heel effect :**

the thicker portion of the anatomical part is placed under the cathode end of the x-ray tube, and the thinner parts under the anode end