Helical/spiral CT Scanners

Sixth Generation (Helical or spiral CT)

In conventional CT (the ***3rd and 4th generation*** CT scanners), the patient was scanned ***one slice at a time***. The X-ray tube and ***detectors rotate for 360 degrees or less to scan one slice*** while the ***table and patient remain stationary***. This ***slice-by-slice*** scanning is ***time-consuming***. On the other hand, ***cables are spooled onto a drum***, released during rotation and re-spooled during reversal. ***Scanning, braking and reversal required at least 8-10 sec of which only 1-2 sec were spent for data acquisition***. The result was a poor ***temporal resolution and long procedure time***.

Therefore, efforts were made to increase the scanning of larger volumes in less time. This notion led to the development of a technique in which a ***volume of tissue is scanned by moving the patient continuously through the gantry of the scanner while the X-ray tube and detectors rotate continuously for several rotations***. As a result, the X-ray ***beam traces a path around the patient***.

The development of ***helical or spiral CT*** was a truly revolutionary advancement in CT scanning that finally allowed true ***3D image acquisition within a single breath hold*** technique. For more clarification, when the examination begins, the X-***ray tube rotates*** continuously while ***the couch moves the patient*** through the plane of the rotating X-ray beam, (***the table smoothly moves through the rotating gantry***). This means that the X-ray tube and detector perform a ***'spiral' or 'helical' movement*** with respect to the patient, generally at a rate of ***one revolution per second***.

In this technique the data are ***continuously acquired*** or collected without pausing while the patient is simultaneously transported at a ***constant speed through the gantry***. For this reason the duty cycle of the helical scan is improved to nearly ***100% and the volume***

coverage speed performance can be substantially improved. This technique ***allows fast and continuous acquisition of the data from a complete volume***.

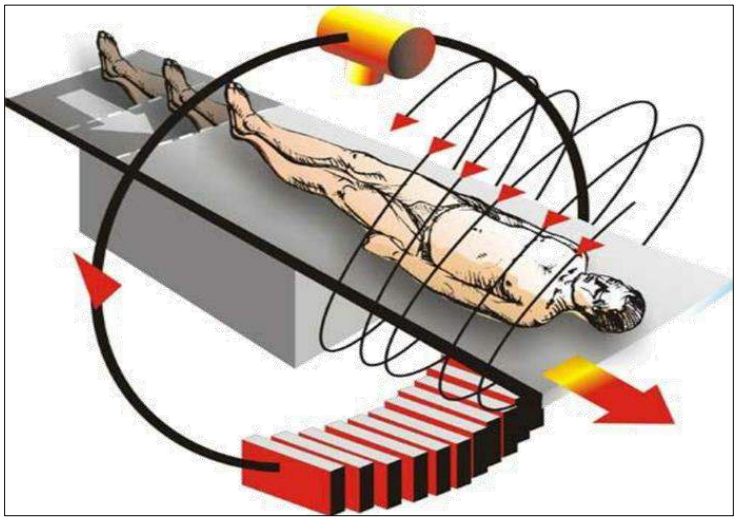

Fig. (1): Helical CT

Three technological developments were required:

1. Slip ring technology
2. High power X-ray tubes
3. Interpolation algorithms

Slip ring technology

All generations of CT scanners (except 4th gen.) required ***winding and unwinding of connection cables causing inter-scan delays***. ***Slip ring*** was designed to ***eliminate this***. A slip ring is ***a drum with grooves along which electrical contactor brushes slide***. Data are transmitted from detectors via various ***high capacity wireless technologies***, thus allowing ***continuous rotation***. Eliminating interscan delays made possible by slip ring technique. *A slip ring passes electrical power to the rotating components without fixed connections*.

It allows the complete elimination of interscan delays except for *the* ***time required to move the table to next slice position***. For eg : if scanning and moving the table each take 1s, only ***50% of the time is spent acquiring the data***.

Slip rings are ***electromechanical devices*** consisting of **circular electrical conductive rings and *brushes that transmit electrical energy across a moving interface***. All power and control signals from the stationary parts of the scanner system are ***communicated to the rotating frame through the slip ring***.

The slip-ring ***design consists of sets of parallel conductive rings*** concentric to the gantry axis that ***connect to the tube, detectors, and control circuits by sliding contactors*** (Fig. 2, 3). These sliding contactors allow the scan frame to rotate continuously with ***no need to stop between rotations to rewind system cables***. This engineering advancement resulted initially from a desire to ***reduce interscan delay and improve throughput***.

However, ***reduced interscan delay increased the thermal demands on the x-ray tube***; hence, tubes ***with much higher thermal capacities*** were required to ***withstand continuous operation over multiple rotations***.

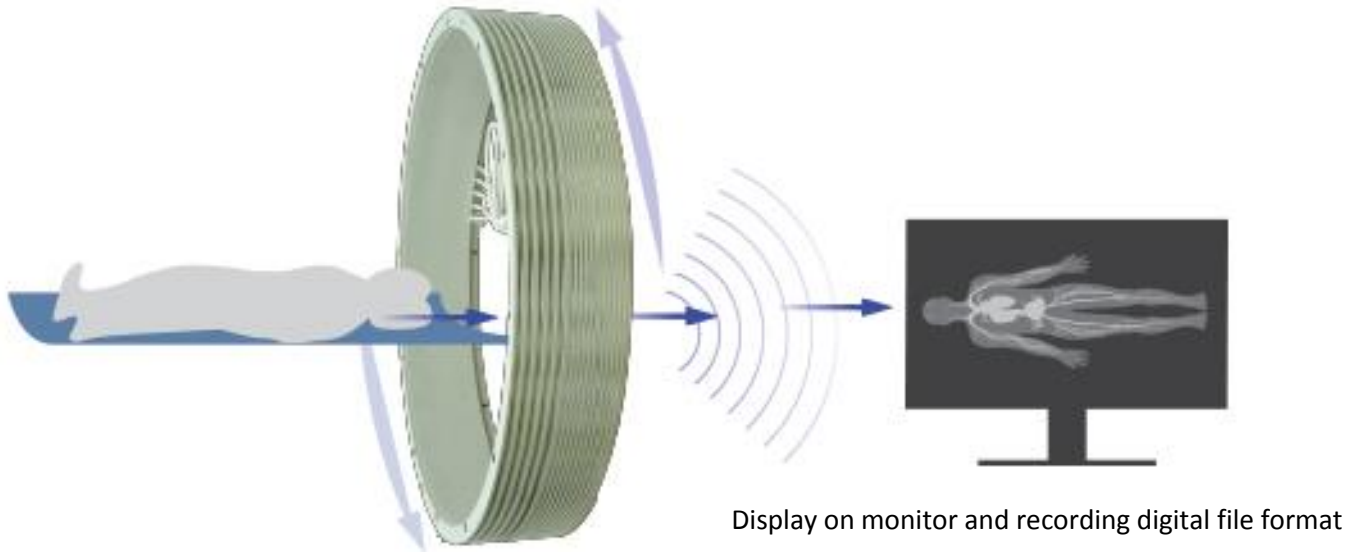

Fig. (2): Slip ring technology

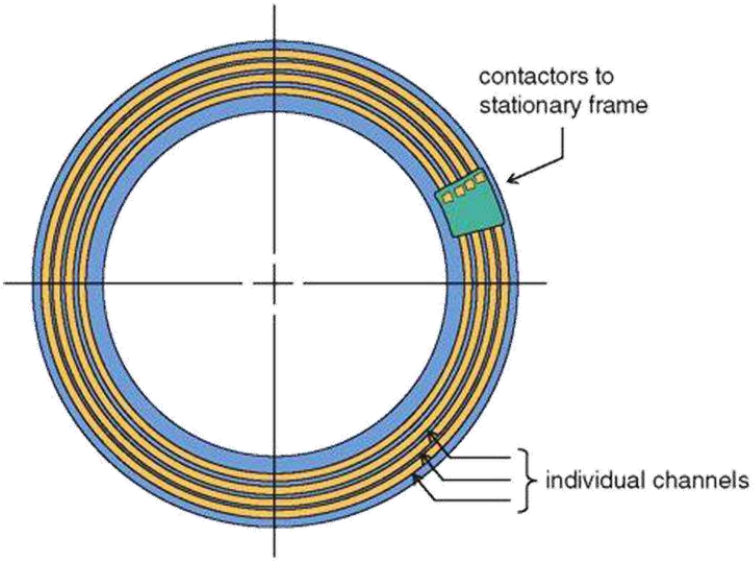

Fig. (3): To convey power onto the rotating gantry from the stationary frame, as well as to conduct signal data from the rotating gantry to the stationary frame, a ***slip ring*** is used. A slip ring uses gliding contacts to allow communication and power transfer between the stationary and rotating frames ***without the use of wires***, and this enables the gantry to ***rotate continuously in a single direction***. Slip rings have enabled gantry rotation periods to move from ***3.0 s (when cables were used)*** to modern CT rotation periods of ***as little as 0.25 s***.

High power X-ray tubes

X-ray tubes are subjected to far ***higher thermal loads in CT than in any other diagnostic*** X-ray application. In ***early CT*** scanners, the power level ***was low***. Since ***long scan times allowed heat dissipation***. Shorter scan times in ***later versions of CT*** scanners required high-power X-ray tubes and use of ***oil cooled rotating anodes for efficient thermal dissipation.***

The introduction of ***helical CT*** with continuous scanner rotation ***placed new demands on X-ray tubes***. Several technical advances in component design have been made to achieve these power levels and deal with the problems of the ***target temperature, heat storage, and heat dissipation***. For example, ***the tube envelope, cathode assembly, and anode assemblies including anode rotation and target design have been redesigned***.

As scan ***times have decreased***, anode ***heat capacities have increased*** by as much as a ***factor of five***, preventing the need for cooling delays during most clinical procedures, and tubes with capacities of ***5–8 million heat units*** are available. In addition, improvement in the ***heat dissipation rate (kilo–heat units per minute) has increased*** the heat storage capacity of modern X-ray tubes.

The ***large heat capacities*** are achieved with ***thick graphite backing of target disks, anode diameters of 200 mm or more, improved high-temperature rotor bearings, and metal housings with ceramic insulators*** (Fig. 4).

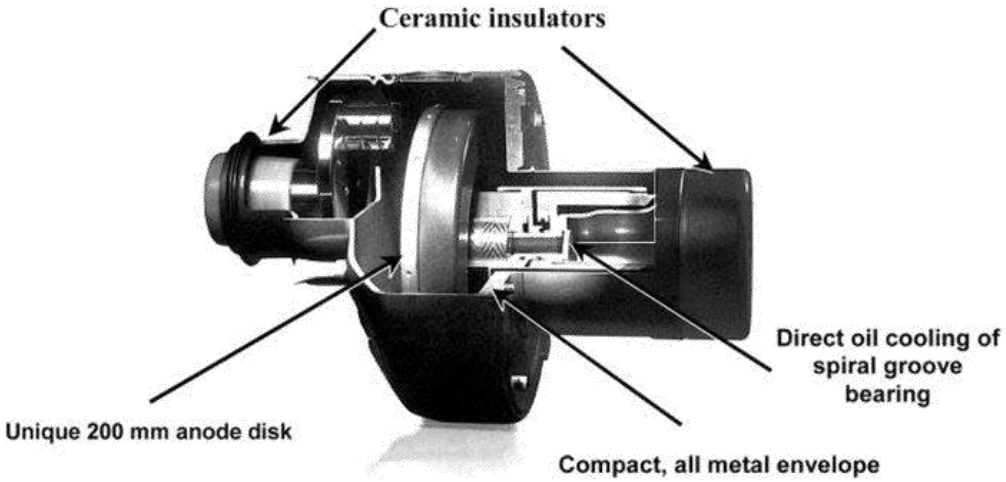

<u>Among other factors</u>. The ***working life*** of tubes used to date ranges from ***10,000 to 40,000 hours***, compared with the ***1,000 hours*** typical of conventional CT tubes. Because many of the engineering changes ***increased the mass of the tube***, much of the design effort was also dedicated ***to reducing the mass to better withstand increasing gantry rotational rates required by ever faster scan times***.

<u>In summary:</u>

Shorter scan time required ***high power*** of X-ray tubes and use of ***oil cooled rotating anodes*** for efficient thermal dissipation. ***Largest heat capacities*** are achieved with:

◣Thick graphite backing of target disks ◣ Anode diameters of 200 mm or more ◣ Metal housing with ceramic insulator. ◣ The working life of tubes ranges from 10,000 – 40,000